FW821 Integrated full height larder fridge

Features

- LED interior lighting
- 1 egg tray
- 2 salad crisper drawers
- In-door balconies: 5
- Glass shelves: 6
- Reversible doors
- Height adjustable feet
- Control system: Digital
- Left/ Right hinged door: Right
- Super cool function
- Sliding decor door brackets

Technical specification

- Noise efficiency class: C
- Sliding furniture fixings
- Fridge useable capacity: 316L net
- Total useable capacity: 316L net
- Noise level: 39dBA
- Climate class: N-ST
- Number of compressors: 1
- Power cable length: 162cm
- Power supply: 13A
- Rated power: 0.062W
- Refrigerant quantity: 60g
- Refrigerant type: R600a
- UK plug
- Voltage/frequency: 220-240V/ 50

Energy
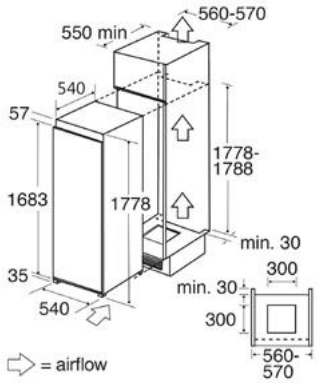
- Energy consumption per annum: 143kW.h
- Energy rating: F