CDI6121 60cm Integrated Dishwasher

Features
- Mini Active
- LED Info dot beam to the floor
- Place settings: 13
- Half Load
- LED rinse aid indicator
- LED salt indicator
- LED progress indicator
- Acoustic end of programme signal
- Electronic softener adjustment
- Number of baskets: 2
- Grey baskets
- Adjustable Feet
- Stainless steel filter
- 1-19 hour delay timer
- 2 spray levels

Programmes
- Number of programmes: 5
- Programme 1: Eco
- Hygiene
- Super
- Quick
- Prewash

Technical specification
- Rated electrical power: 1900kW
- Noise level: 49dBA
- UK plug fitted
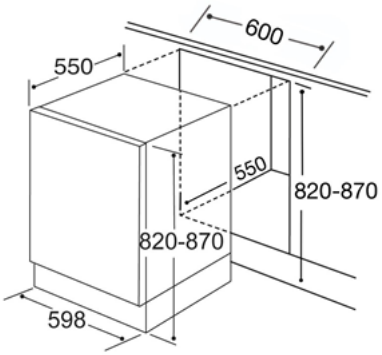
Energy
- Eco programme water consumption: 9.0
- Eco programme energy consumption per 100 cycles: 94
- Eco programme duration: 3:41
- Noise level: 49
- Noise level class: C
- Off mode power consumption: 0.5W
- On mode power consumption: 1W
- Energy efficiency class: E
- Energy consumption per annum: 261kW.h
- Energy consumption per cycle: 0.917kW.h
- 2520
- Water consumption per cycle: 9L